110-170 GHz Tunable Attenuator

可调衰减器

描述Description

The L¢!-6009 is a waveguide ŭdzy1·ōfŜ l·ŭŭŜyďzl·ŭ2ℕ which operates between 110 and 170 GHz.

特点Feature

- ■ CℕŜljdzŜyŎè wl·y∃Ŝ℣ 110π170 D l Î
- ■ !ŭŭŜyďzl·ŭλ2y˜wl·y∃Ŝ℣ лπпл Ř.

产品规格Specifications	
RF频率RF Frequency [GHz]	110 - 170
衰减范围Attenuation [dB]	0-40可调
插入损耗Insertion Loss [dB]	0.7
RF输入功率RF Input Power[dBm]	20
RF接口RF Port	WR6.5(UG387/UM)
工作温度Operation Temperature[℃]	+18 ~ +28
储存温度Storage Temperature[℃]	-40 ~ +70

典型性能Typical Performance

Attenuation vs Frequency

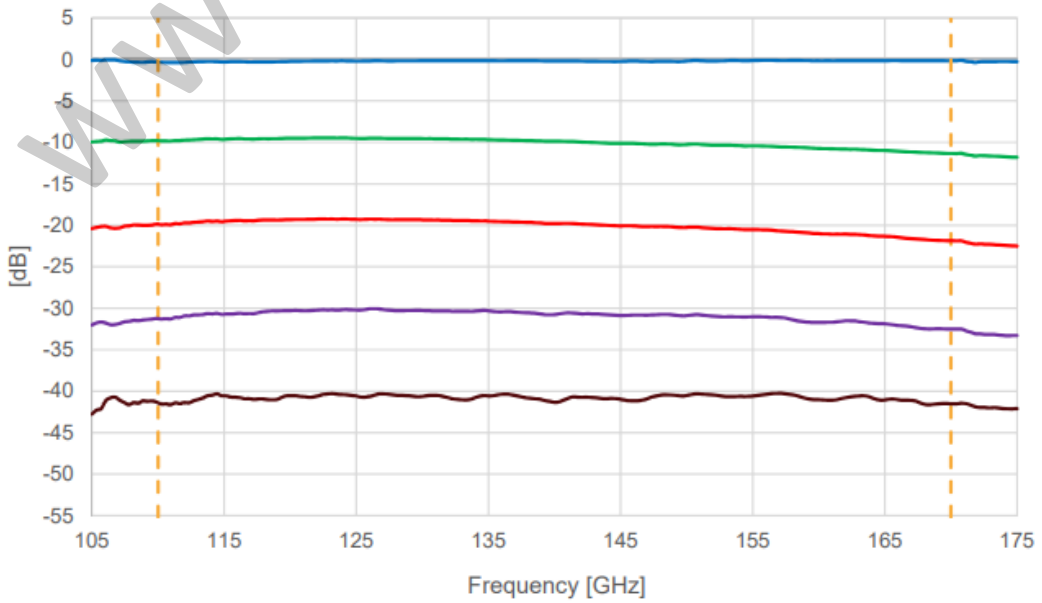

www.lairmw.com

110-170 GHz Tunable Attenuator

可调衰减器

外形尺寸Overall Dimension

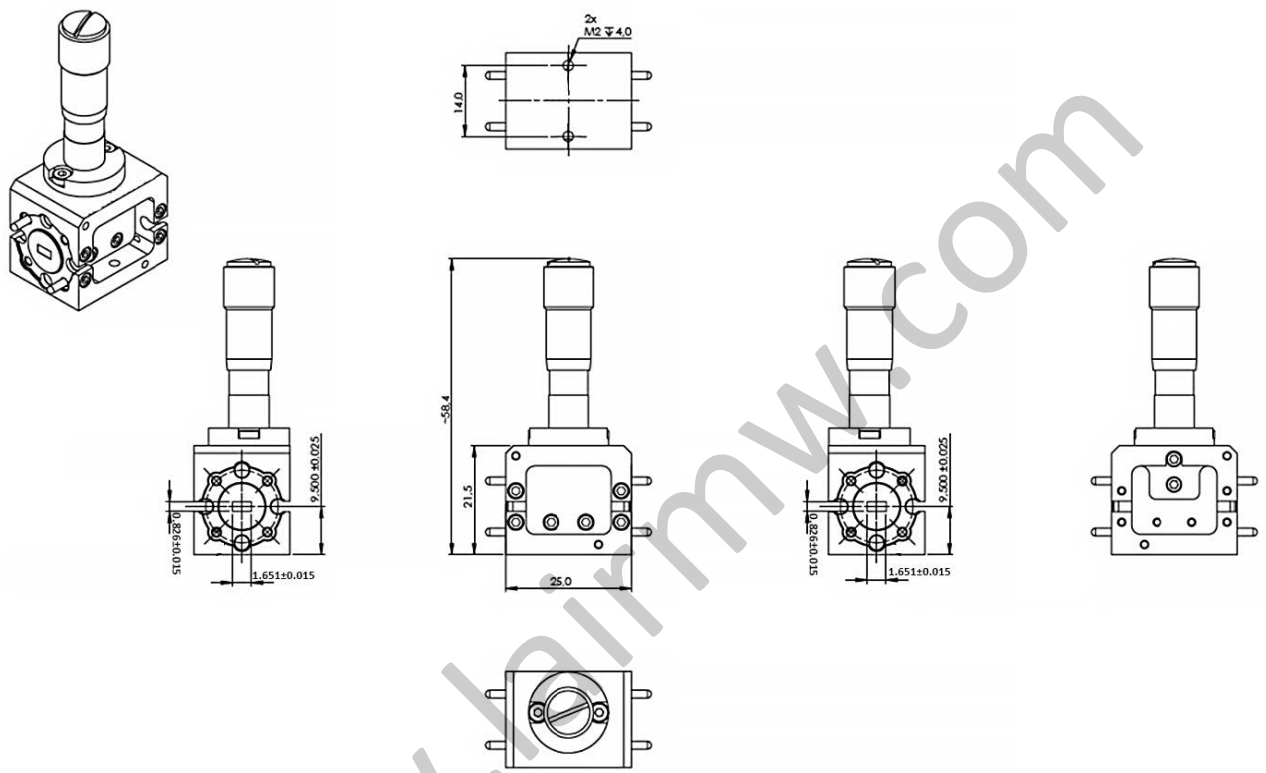

www.lairmw.com