NOTES:UNLESSOTHERWISE SPECIFIED
THIS IS A CAD GENERATED DRAWING,DO NOT REVISE MANUALLY

REVISION HISTORY					
ZONE	REV	DESCRIPTION	E.C.O.NO	DATE	APPROVED
	1	ENGINEERING RELEASE			

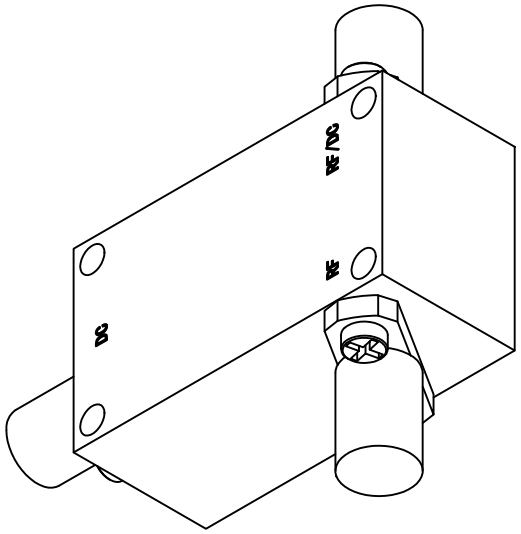

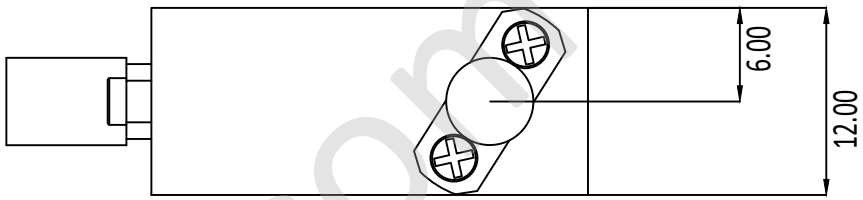

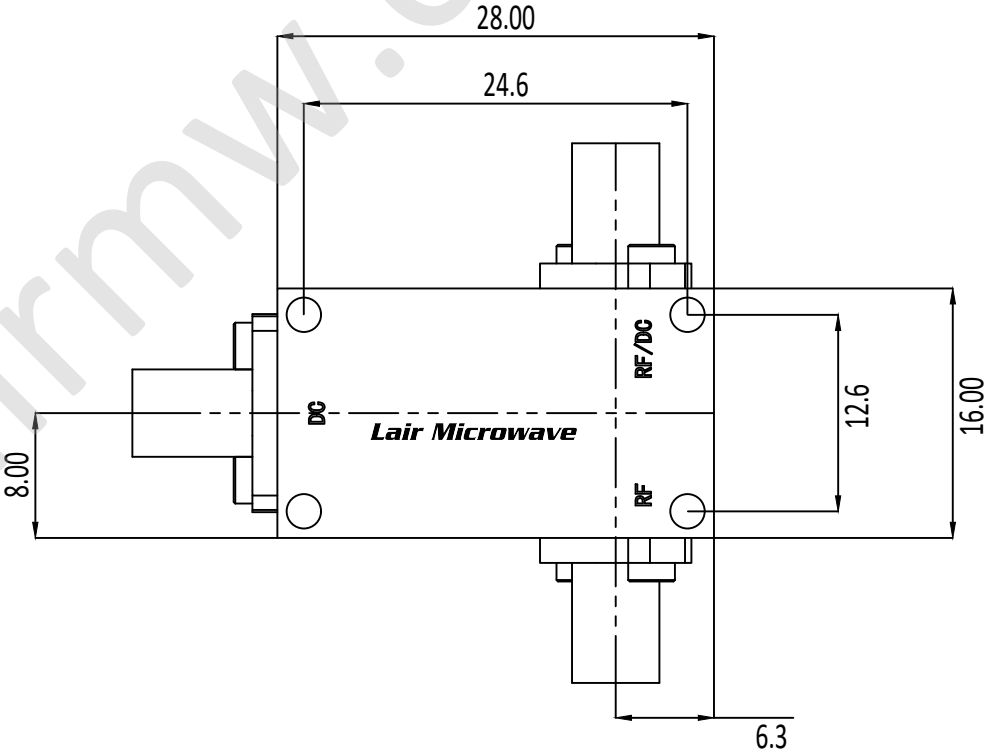

LM-PZQ-000530

5MHz ~ 30GHz 偏置器 Bias Tee

—电气技术参数Electrical Specifications—

频率范围 Frequency Range:	5MHz - 30GHz
插入损耗 Insertion Loss:	1.0dB@5MHz~20GHz, 1.5dB@20GHz~30GHz
驻波比 VSWR:	1.5 (Typ.), 1.8 (Max.)
工作电压 Operation Voltage:	+12V
工作电流 Operation Current:	300mA
工作温度 Operation Temperature:	-40~+70℃
存储温度 Storage Temperature:	-55~+85℃

—机械技术参数Mechanical Specification—

RF连接器 RF Interface:	2.92mm-M
RF&DC连接器 RF&DC Interface:	2.92mm-F
DC端连接器 DC Interface:	SMA-F
重量 Weight:	/

UNLESS OTHERWISE SPECIFIED
DIMENSIONS ARE MILLIMETER
TOLERANCES ARE:

DECIMALS	ANGLES	FRACTIONS
.X±0.1	±1°	±2/5
.XX±0.03		
.XXX±0.012		

HOLE DIAMETER	TOLERANCES
.35 TO 3.20	+.05/-.02
3.21 TO 6.35	+.10/-.03
6.36 TO 12.70	+.15/-.03
12.71 TO 19.05	+.20/-.03
19.06 TO 25.40	+.25/-.03
25.41 TO 50.80	+.30/-.03

Approvals	DATE
DRWN: QY	2023/01/10
ENG: CYL	2023/01/10
CHK: WY	2023/01/10

莱尔微波 Lair Microwave
www.lairmw.com sales@lairmw.com

P/N: LM-PZQ-000530

5MHz~30GHz 偏置器Bias Tee

SIZE	CAGE NO	DWG NO.	REV
A3			1
SCALE 3:2	UNIT mm	SHEET 1 OF 1	

www.lairmw.com