NOTES:UNLESSOTHERWISE SPECIFIED
THIS IS A CAD GENERATED DRAWING,DO NOT REVISE MANUALLY

REVISION HISTORY					
ZONE	REV	DESCRIPTION	E.C.O.NO	DATE	APPROVED
	1	ENGINEERING RELEASE			

LAP-5132

2 – 6 GHz 15W 功率放大器 Power Amplifier

—电气技术参数 Electrical Specifications—

频率范围 Frequency Range:	2 – 6 GHz
增益 Gain:	43dB
输出 P_{3dB} Output P_{3dB}:	+38.5dBm
输出功率三阶截断点 OIP3:	+46dBm
输入驻波比 Input VSWR:	1.2:1
输出驻波比 Output VSWR:	/
直流偏置电压 DC Supply Voltage:	+32V
直流偏置电流 DC Supply Current:	2300mA
工作温度 Operation Temperature:	-20 ～ +65°C
存储温度 Storage Temperature:	-55～ +125°C

—机械技术参数 Mechanical Specifications—

输入连接器 Input Interface:	SMA-F
输出连接器 Output Interface:	SMA-F
尺寸 Size（excluding connectors）:	/
重量 Weight:	/

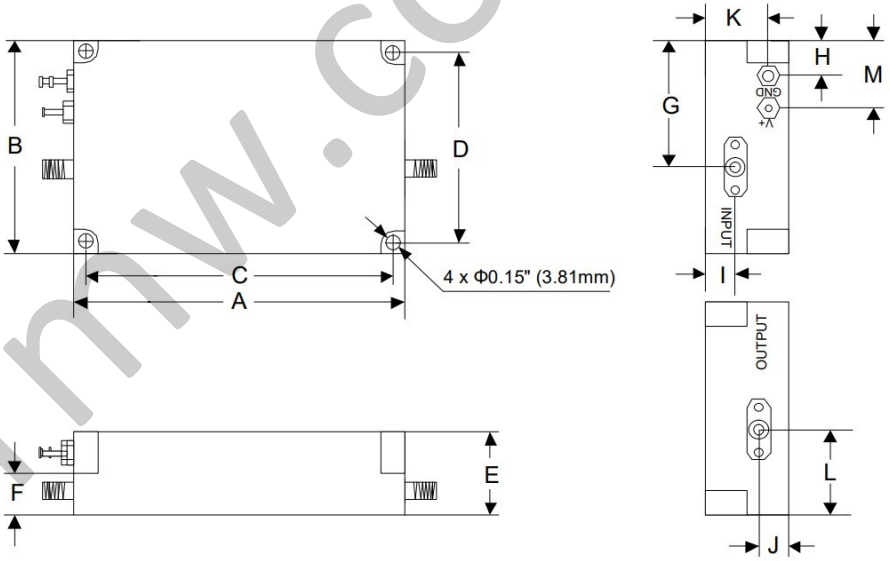

Mounting screws recommended to use hex socket head cap #6x3/4”

	A	B	C	D	E	F	G	H	I
Inch	4.00	2.50	3.70	2.20	1.05	0.54	1.40	0.30	0.30
mm	101.60	63.50	93.98	55.88	26.67	13.72	35.56	7.62	7.62
	J	K	L	M					
Inch	0.30	0.75	1.10	0.70					
mm	7.62	19.05	27.94	17.78					

UNLESS OTHERWISE SPECIFIED
DIMENSIONS ARE MILLIMETER
TOLERANCES ARE:
DECIMALS ANGLES FRACTIONS
.X±0.1 ±1° ±2/5
.XX±0.03
.XXX±0.012

HOLE DIAMETER	TOLERANCES
.35 TO 3.20	+.05/-.02
3.21 TO 6.35	+.10/-.03
6.36 TO 12.70	+.15/-.03
12.71 TO 19.05	+.20/-.03
19.06 TO 25.40	+.25/-.03
25.41 TO 50.80	+.30/-.03

Approvals	DATE
DRWN	
ENG	
CHK	
Q.A.	

莱尔微波 Lair Microwave
www.lairmw.com sales@lairmw.com

P/N: LAP-5132

2 - 6GHz 功率放大器Power Amplifier
增益 Gain 43dB

SIZE	CAGE NO	DWG NO.	REV
A3			1
SCALE 3:2	UNIT mm	SHEET 1 OF 1	

www.lairmw.com