NOTES:UNLESSOTHERWISE SPECIFIED
THIS IS A CAD GENERATED DRAWING,DO NOT REVISE MANUALLY

REVISION HISTORY					
ZONE	REV	DESCRIPTION	E.C.O.NO	DATE	APPROVED
	1	ENGINEERING RELEASE			

LAP-5002

50 – 3000 MHz 功率放大器 Power Amplifier

—电气技术参数 Electrical Specifications—

频率范围 Frequency Range:	50 – 3000 MHz
增益 Gain:	50dB
输出 P_{1dB} Output P_{1dB}:	+14dBm
输出功率三阶截断点 OIP3:	+28dBm
输入驻波比 Input VSWR:	1.3:1
输出驻波比 Output VSWR:	1.3:1
直流偏置电压 DC Supply Voltage:	+9 ～ +15 V
直流偏置电流 DC Supply Current:	155mA
工作温度 Operation Temperature:	-40 ～ +85°C
存储温度 Storage Temperature:	-55 ～ +125°C

—机械技术参数 Mechanical Specifications—

输入连接器 Input Interface:	SMA-F
输出连接器 Output Interface:	SMA-F
尺寸 Size（excluding connectors）:	/
重量 Weight:	/

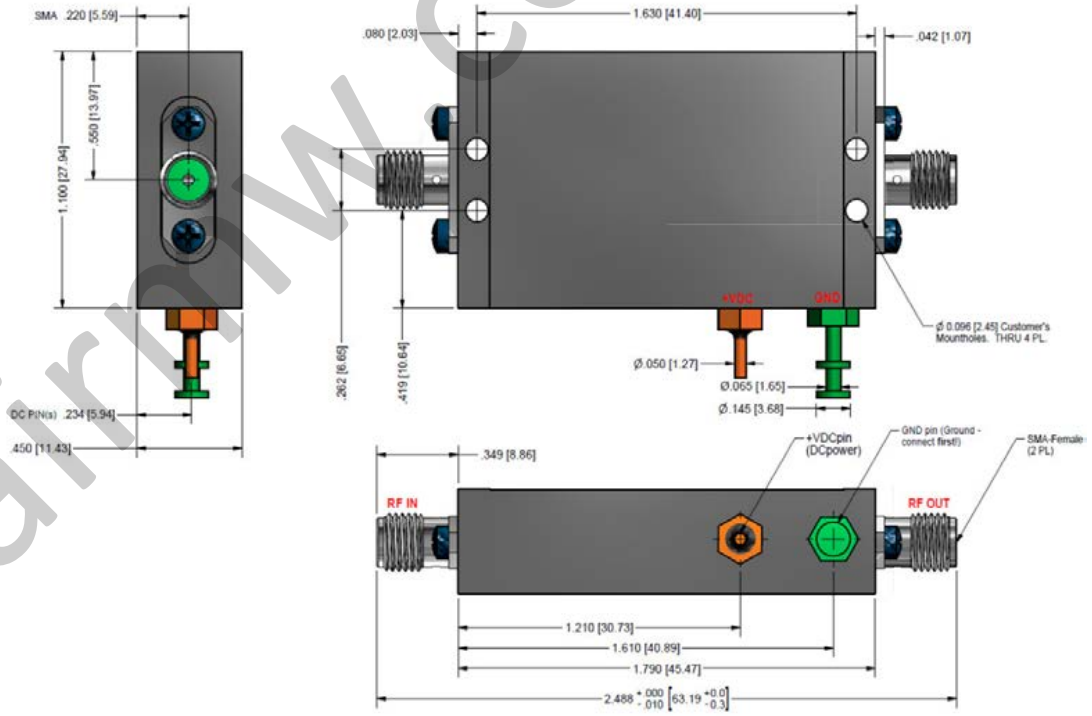

UNLESS OTHERWISE SPECIFIED
DIMENSIONS ARE MILLIMETER
TOLERANCES ARE:

DECIMALS	ANGLES	FRACTIONS
.X±0.1	±1°	±2/5
.XX±0.03		
.XXX±0.012		

HOLE DIAMETER	TOLERANCES
.35 TO 3.20	+.05/-.02
3.21 TO 6.35	+.10/-.03
6.36 TO 12.70	+.15/-.03
12.71 TO 19.05	+.20/-.03
19.06 TO 25.40	+.25/-.03
25.41 TO 50.80	+.30/-.03

Approvals	DATE
DRWN	
ENG	
CHK	
Q.A.	

莱尔微波 Lair Microwave
www.lairmw.com sales@lairmw.com

P/N: LAP-5002

50 - 3000MHz 功率放大器Power Amplifier
增益 Gain 50dB

SIZE	CAGE NO	DWG NO.	REV
A3			1
SCALE 3:2	UNIT mm	SHEET 1 OF 1	

www.lairmw.com