NOTES:UNLESSOTHERWISE SPECIFIED
THIS IS A CAD GENERATED DRAWING,DO NOT REVISE MANUALLY

REVISION HISTORY					
ZONE	REV	DESCRIPTION	E.C.O.NO	DATE	APPROVED
	1	ENGINEERING RELEASE			

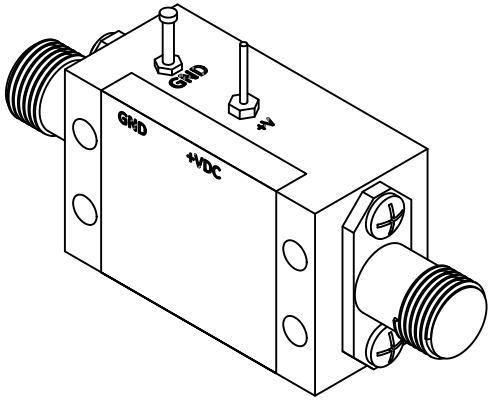

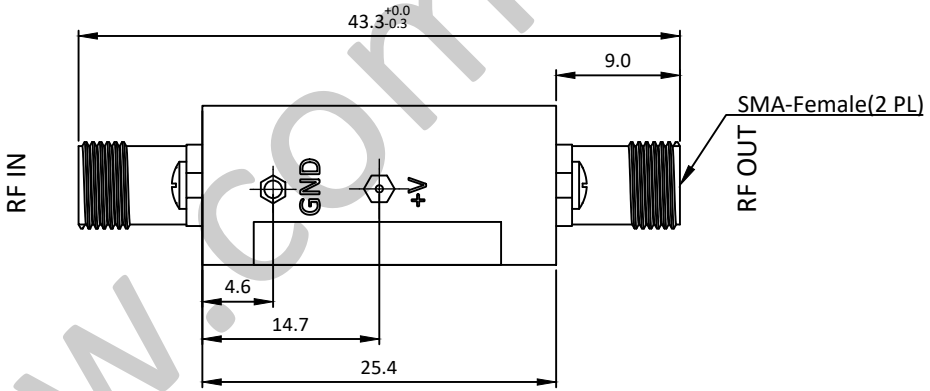

LAL-5085

6 - 18GHz 低噪声放大器 Low Noise Amplifier

—电气技术参数Electrical Specifications—

频率范围 Frequency Range:	6 - 18GHz
增益Gain:	23dB
增益平坦度Gain Flatness:	±2.7dB
噪声系数 Noise Figure:	1.5dB
输出P_{1dB} Output P_{1dB}:	17dBm
输入驻波比Input VSWR:	1.5:1
输出驻波比Output VSWR:	1.5:1
直流偏置电压DC Supply Voltage:	+5V
直流偏置电流DC Supply Current:	90mA
工作温度Operation Temperature:	-40 ~ +85℃
存储温度Storage Temperature:	-55 ~ +125℃

—机械技术参数Mechanical Specification—

输入连接器Input Interface:	SMA-F
输出连接器Output Interface:	SMA-F
尺寸Size(excluding connectors):	/
重量Weight:	/

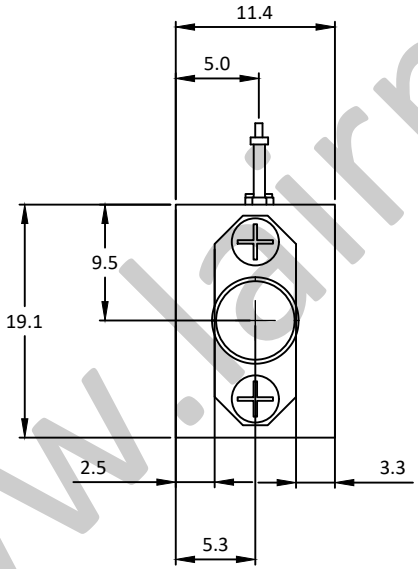

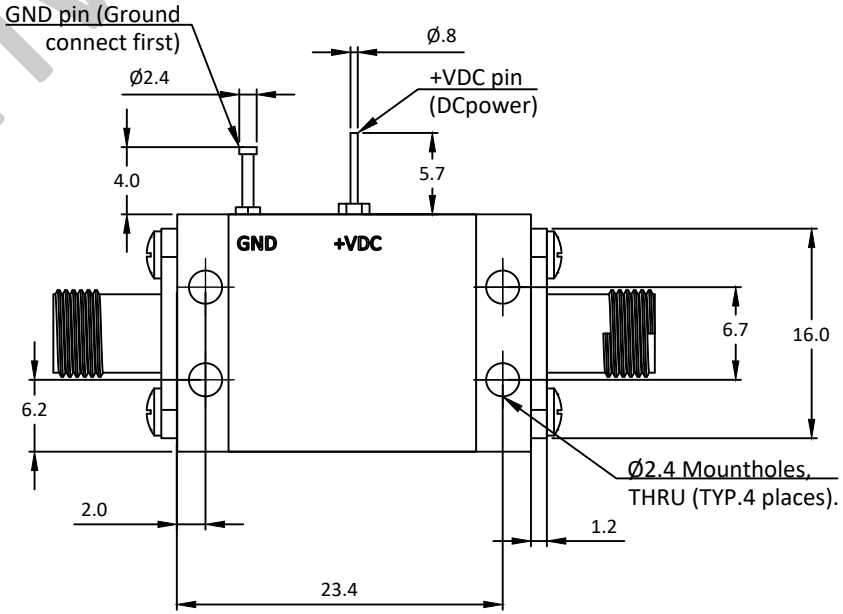

UNLESS OTHERWISE SPECIFIED
DIMENSIONS ARE MILLIMETER
TOLERANCES ARE:

DECIMALS	ANGLES	FRACTIONS
.X±0.1	±1°	±2/5
.XX±0.03		
.XXX±0.012		

HOLE DIAMETER	TOLERANCES
.35 TO 3.20	+.05/-.02
3.21 TO 6.35	+.10/-.03
6.36 TO 12.70	+.15/-.03
12.71 TO 19.05	+.20/-.03
19.06 TO 25.40	+.25/-.03
25.41 TO 50.80	+.30/-.03

Approvals	DATE
DRWN	
ENG	
CHK	
Q.A.	

莱尔微波 Lair Microwave
www.lairmw.com sales@lairmw.com

P/N: LAL-5085

6-18GHz 低噪声放大器Low Noise Amplifier
增益 Gain 23dB, 噪声系数 NF 1.5dB

SIZE	CAGE NO	DWG NO.	REV
A3			1
SCALE 3:2	UNIT mm	SHEET 1 OF 1	

www.lairmw.com